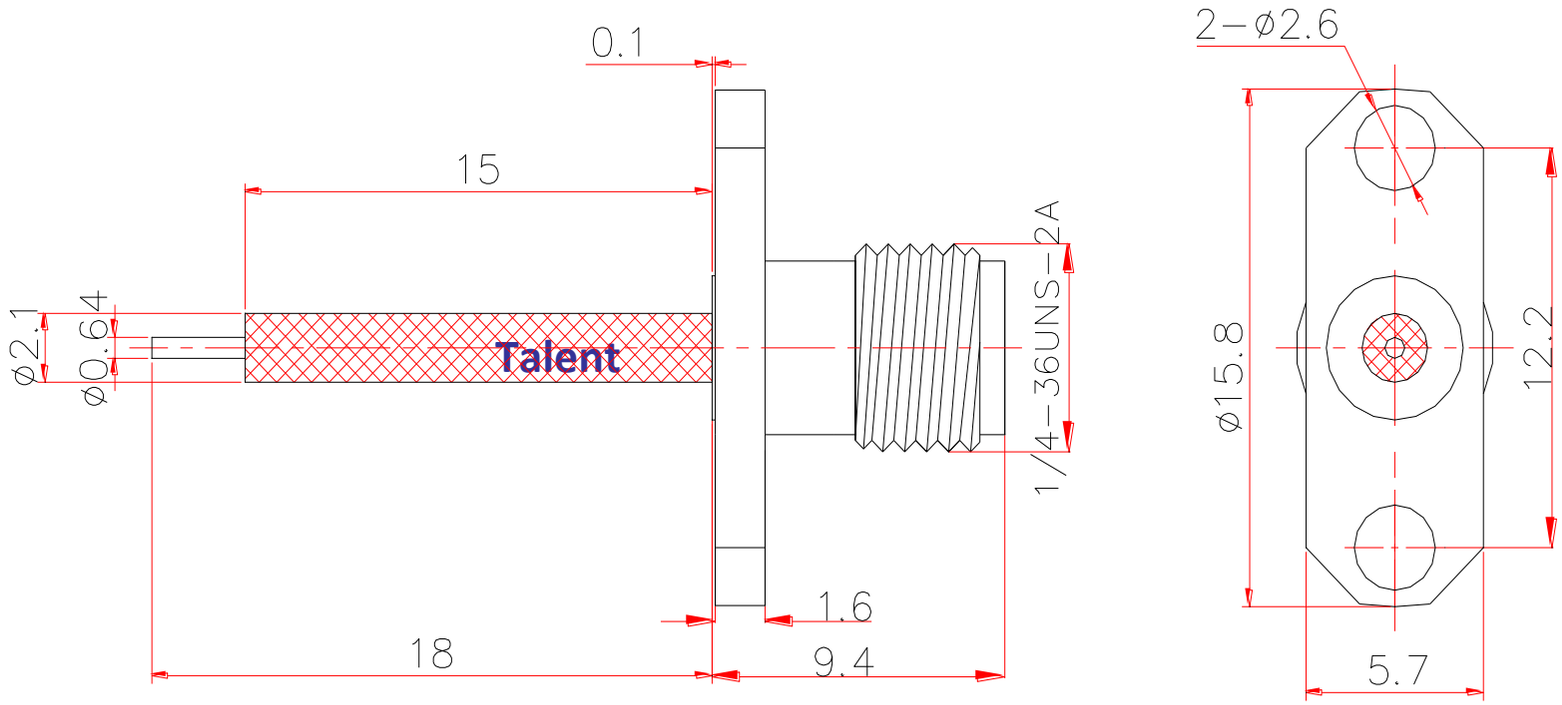

Electrical & Environmental Characteristics	
Impedance	50 Ohm
Insulation Resistance	5000 MΩ
Operating Frequency	26.5GHz
Dielectric Withstanding Voltage	1000 V
VSWR	1.15
Insertion Loss	0.05*Sqt(f_GHz)
Operating Temperature	-55~+165℃
Material & Coat-Plating	
Inner Conductor	Beryllium Copper, Gold
Dielectric	PTFE
Body	Stainless Steel, Passivated
Coupling Nut	N/A

THIS DRAWING IS A CONTROLLED DOCUMENT		DWN	Suzhou Talent Microwave,Inc
		CHK	
Unit mm	TOLERANCES UNLESS OTHERWISE SPECIFIED 0 PLC ±0.25 1 PLC ±0.15 2 PLC ±0.12 3 PLC ±- 3 PLC ±- ANGLES ±1°	APVD	Product Mode
		PRODUCT SPEC	SMA-KFD60403 SMA Female Flange Connector
		APPLICATON SPEC	
MATEIAL SEE TABLE	FINISH SEE TABLE	WEIGHT	SIZE A4 / GAGE CODE 0T8L4 / DRAWING NO
		CUSTOMER DRAWING	SCALE 4: / SCALE 4: 1 / SHEET1 OF 1 / RVE 1