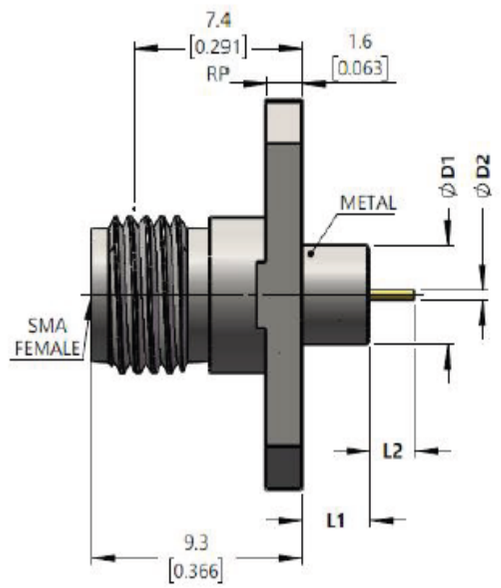

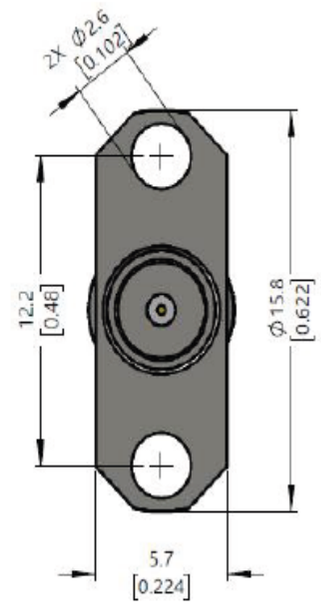

No.	Model	D1(Diameter1)	D2(Diameter2)	L1(Length1)	L2(Length2)
1	SMA-KFD70402	4.0 [0.157]	0.38 [0.015]	3 [0.118]	2 [0.079]
2	SMA-KFD70402-039	4.0 [0.157]	0.38 [0.015]	3 [0.118]	1 [0.039]
3	SMA-KFD70402-140	4.0 [0.157]	0.38 [0.015]	1.4 [0.055]	2 [0.079]
4	SMA-KFD7040201	4.0 [0.157]	0.38 [0.015]	3 [0.118]	0.4 [0.016]
5	SMA-KFD7040206	4.0 [0.157]	0.38 [0.015]	3 [0.118]	0.6 [0.024]
6	SMA-KFD7040288	4.0 [0.157]	0.38 [0.015]	3 [0.118]	1.27 [0.050]
7	SMA-KFD7040289	4.0 [0.157]	0.38 [0.015]	3 [0.118]	3 [0.118]
8	SMA-KFD7040404	4.0 [0.157]	0.38 [0.015]	4 [0.157]	2 [0.079]
9	SMA-KFD70401	4.0 [0.157]	0.80 [0.031]	4 [0.157]	2 [0.079]
10	SMA-KFD7040403	4.0 [0.157]	0.30 [0.012]	1.4 [0.055]	1.5 [0.059]
11	SMA-KFD7041001	4.0 [0.157]	0.51 [0.020]	4 [0.157]	2 [0.079]
12	SMA-KFD7040208	4.1 [0.161]	0.38 [0.015]	4 [0.157]	2 [0.079]
13	SMA-KFD7040203	4.1 [0.161]	0.30 [0.012]	4 [0.157]	2.5 [0.098]

Electrical & Environmental Characteristics	
Impedance	50 Ω
Insulation Resistance	5000 MΩ
Operating Frequency	DC~26.5GHz
Dielectric Withstanding Voltage	1000V
VSWR	≤1.15
Insertion Loss	≤0.05*Sqt(f_GHz)
Operating Temperature	- 55~+165℃
Material & Coat-Plating	
Inner Conductor	Beryllium Copper, Gold
Dielectric	PTFE
Body	Stainless Steel,Passivated
Coupling Nut	NA

THIS DRAWING IS A CONTROLLED DOCUMENT

DWN

CHK

Suzhou Talent Microwave,Inc

Unit mm

TOLERANCES UNLESS OTHERWISE SPECIFIED
0 PLC ±0.25
1 PLC ±0.15
2 PLC ±0.12
3 PLC ±-
3 PLC ±-
ANGLES ±1°

APVD

PRODUCT SPEC

APPLICATON SPEC

Product Model

SMA-KFD7040289
SMA Female Flange Connector

MATEIAL SEE TABLE

FINISH SEE TABLE

WEIGHT

SIZE A4

GAGE CODE 0T8L4

DRAWING NO

CUSTOMER DRAWING

SHEET1 OF 1

RVE 1