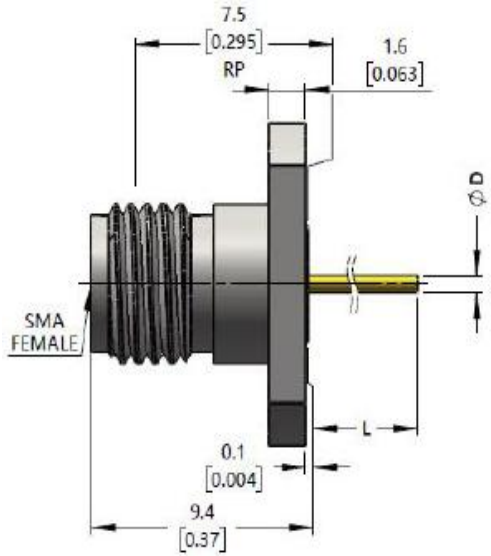


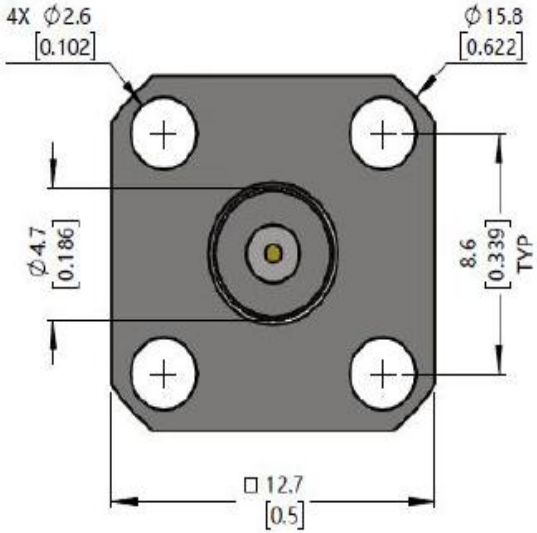


| No. | Model | D(Diameter) | L(Length) |
|---|---|---|---|
| 1 | SMA-KFD50112-078 | 0.30 [0.012] | 2 [0.079] |
| 2 | SMA-KFD50120-236 | 0.50 [0.020] | 6 [0.236] |
| 3 | SMA-KFD50124-1024 | 0.60 [0.024] | 26 [1.024] |
| 4 | SMA-KFD50125-98 | 0.64 [0.025] | 2.5 [0.098] |
| 5 | SMA-KFD50125-236 | 0.64 [0.025] | 6 [0.236] |
| 6 | SMA-KFD50125-787 | 0.64 [0.025] | 20.8 [0.819] |
| 7 | SMA-KFD50125-709 | 0.64 [0.025] | 18 [0.709] |
| 8 | SMA-KFD50131-839 | 0.80 [0.031] | 21.3 [0.839] |
| 9 | SMA-KFD50131-980 | 0.80 [0.031] | 24.9 [0.980] |
| 10 | SMA-KFD50131-2362 | 0.80 [0.031] | 60 [2.362] |
| 11 | SMA-KFD50134-430 | 0.87 [0.034] | 10.92 [0.430] |
| 12 | SMA-KFD50134-818 | 0.87 [0.034] | 20.8 [0.819] |
| 13 | SMA-KFD50134-1024 | 0.87 [0.034] | 26 [1.024] |
| 14 | SMA-KFD50134-1388 | 0.87 [0.034] | 35 [1.378] |

| Electrical & Environmental Characteristics | |
|---|---|
| Impedance | 50 Ω |
| Insulation Resistance | 5000 MΩ |
| Operating Frequency | DC~26.5GHz |
| Dielectric Withstanding Voltage | 1000V |
| VSWR | ≤1.15 |
| Insertion Loss | ≤0.05*Sqt(f_GHz) |
| Operating Temperature | - 55~+165℃ |
| **Material & Coat-Plating** | |
| Inner Conductor | Beryllium Copper, Gold |
| Dielectric | PTFE |
| Body | Stainless Steel,Passivated |
| Coupling Nut | N/A |

| | | | |
|---|---|---|---|
| THIS DRAWING IS A CONTROLLED DOCUMENT | | DWN | Suzhou Talent Microwave,Inc |
| | | CHK | |
| Unit mm | TOLERANCES UNLESS OTHERWISE SPECIFIED<br>0 PLC ±0.25<br>1 PLC ±0.15<br>2 PLC ±0.12<br>3 PLC ±-<br>3 PLC ±-<br>ANGLES ±1° | APVD | Product Model<br>SMA-KFD50125-98<br>SMA Female Flange Connector |
| | | PRODUCT SPEC | |
| | | APPLICATON SPEC | |
| MATEIAL SEE TABLE | FINISH SEE TABLE | WEIGHT | SIZE A4 / GAGE CODE 0T8L4 / DRAWING NO |
| | | CUSTOMER DRAWING | SHEET1 OF 1 / RVE 1 |