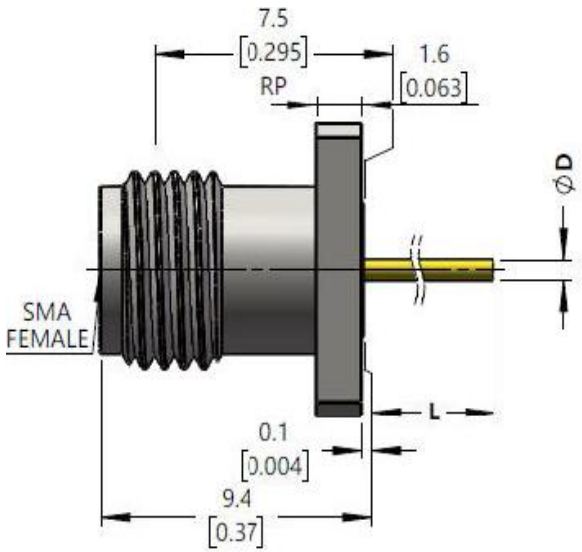

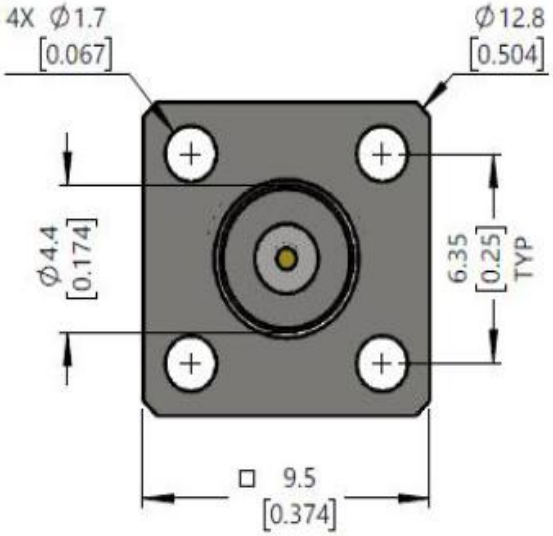

No.	Model	D(Diameter)	L(Length)
1	SMA-KFD50212-078	0.30 [0.012]	2 [0.079]
2	SMA-KFD50220-236	0.50 [0.020]	6 [0.236]
3	SMA-KFD50224-1024	0.60 [0.024]	26 [1.024]
4	SMA-KFD50225-98	0.64 [0.025]	2.5 [0.098]
5	SMA-KFD50225-236	0.64 [0.025]	6 [0.236]
6	SMA-KFD50225-787	0.64 [0.025]	20.8 [0.819]
7	SMA-KFD50225-709	0.64 [0.025]	18 [0.709]
8	SMA-KFD50231-839	0.80 [0.031]	21.3 [0.839]
9	SMA-KFD50231-980	0.80 [0.031]	24.9 [0.980]
10	SMA-KFD50231-2362	0.80 [0.031]	60 [2.362]
11	SMA-KFD50234-430	0.87 [0.034]	10.92 [0.430]
12	SMA-KFD50234-818	0.87 [0.034]	20.8 [0.819]
13	SMA-KFD50234-1024	0.87 [0.034]	26 [1.024]
14	SMA-KFD50234-1388	0.87 [0.034]	35 [1.378]

Electrical & Environmental Characteristics	
Impedance	50 Ω
Insulation Resistance	5000 MΩ
Operating Frequency	DC~26.5GHz
Dielectric Withstanding Voltage	1000V
VSWR	≤1.15
Insertion Loss	≤0.05*Sqt(f_GHz)
Operating Temperature	- 55~+165℃
Material & Coat-Plating	
Inner Conductor	Beryllium Copper, Gold
Dielectric	PTFE
Body	Stainless Steel,Passivated
Coupling Nut	N/A

THIS DRAWING IS A CONTROLLED DOCUMENT		DWN	Suzhou Talent Microwave,Inc
		CHK	
Unit mm	TOLERANCES UNLESS OTHERWISE SPECIFIED 0 PLC ±0.25 1 PLC ±0.15 2 PLC ±0.12 3 PLC ±- 3 PLC ±- ANGLES ±1°	APVD	Product Model SMA-KFD50212-078 SMA Female Flange Connector
		PRODUCT SPEC	
		APPLICATON SPEC	
MATEIAL SEE TABLE	FINISH SEE TABLE	WEIGHT	SIZE A4 / GAGE CODE 0T8L4 / DRAWING NO
		CUSTOMER DRAWING	SHEET1 OF 1 / RVE 1