Suzhou Talent Microwave,Inc
sales@talentmw.com
www.talentmw.com

W–Band Frequency Extender

67-110GHz/WR-10

Model: TLSE-067110-30-10-HA

TLSE-067110-30-10-HA frequency extenders are a dedicated Test & Measurement solution for extending the range of your signal source to 67-110GHz.

Features:

- Frequency range: 67-110 GHz
- Output Power: -10~+20dBm Typ
- Low power consumption

Applications:

- Frequency Extension
- Antenna measurements
- Material characterisation

Electrical Characteristics:

Parameter	Min	Typ	Max	Units
Frequency range	67		110	GHz
Output Power	-10		20	dBm
Input Frequency	11.16		18.34	GHz
Frequency Step		0.1		MHz
Input Power		0		dBm
Power Step		0.5		dB
Switching Time			200	us
Multiplication Factor		6		
Spurious Suppression		60		dBc
Harmonics Suppression		50		dBc
Supply Voltage		220		V AC

Suzhou Talent Microwave,Inc
sales@talentmw.com
www.talentmw.com

Mechanical Specifications:

参数 Parameter	指标 Value	单位 Units
Input Connector	SMA Female	
Output Connector	WR-10/UG-387/U	
Power Supply Pin	FGG 0B 4 Core	
Size	255*130*75	mm

Absolute Maximum Ratings:

Parameter	Value
Supply Bias Voltage	+240 V AC
RF Input Power	+10 dBm
ESD sensitivity (HBm)	Class 0, passed 150V

Outline Drawing:

Unit:mm; Tolerance:±0.1mm

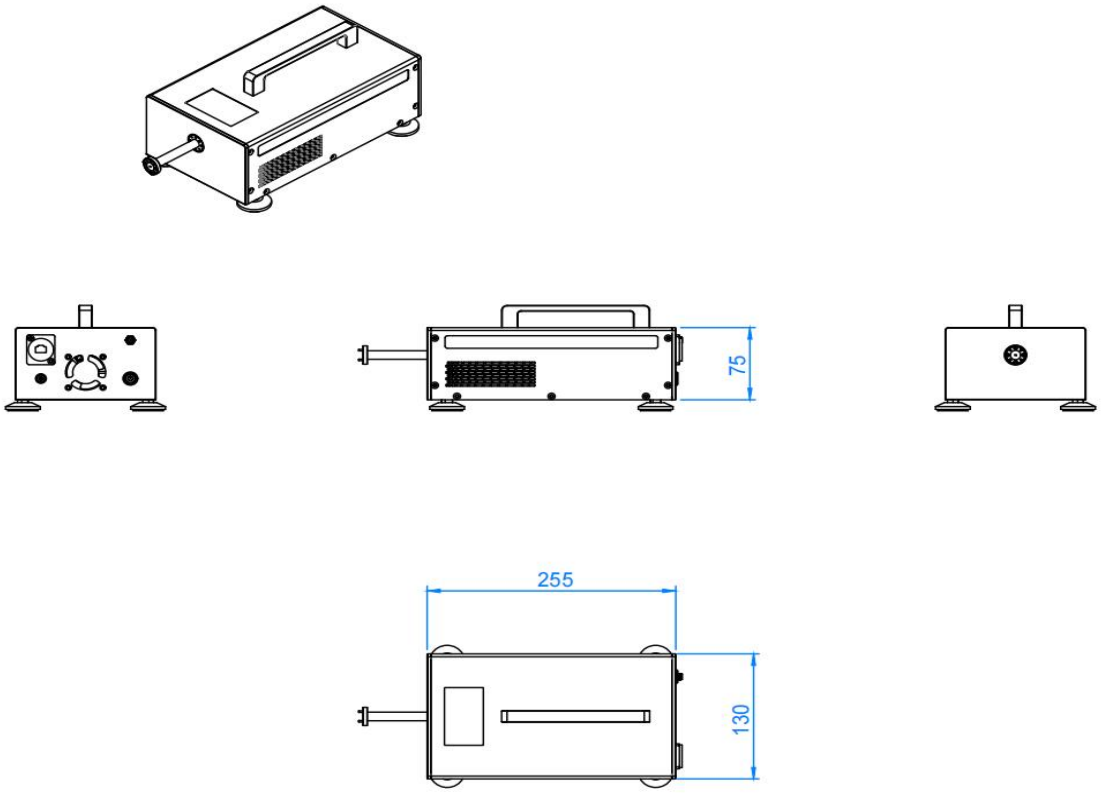

Suzhou Talent Microwave,Inc
sales@talentmw.com
www.talentmw.com

Block Diagrams:

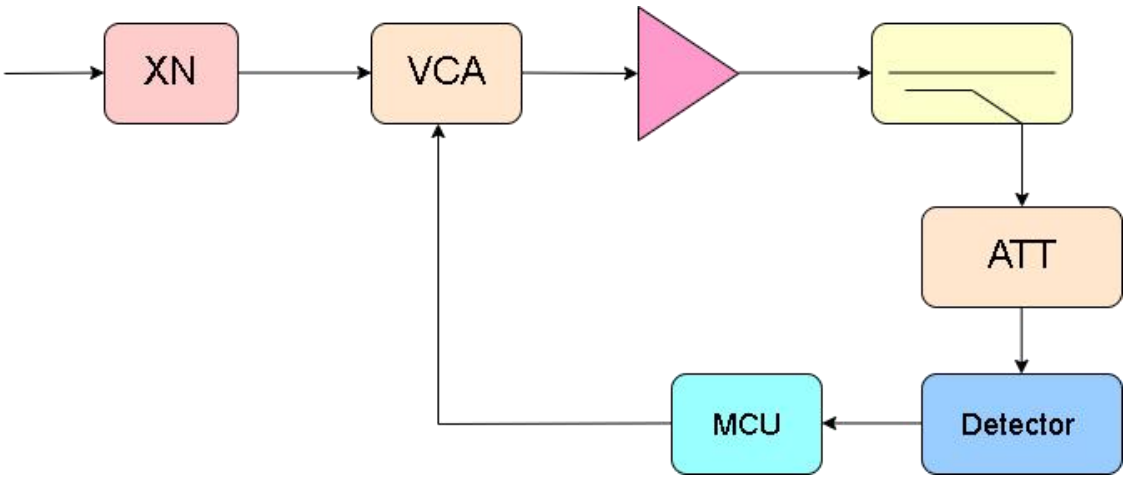

Environmental Conditions:

Parameter	Min	Typ	Max	Units
Operating Temperature	-10		+65	℃
Non-operating Temperature	-45		+85	℃
Relative humidity		95		%
Altitude	10,000			feet
Shock / Vibration(MIL-STD-810F)	25g rms (15 degree 2KHz) endurance, 1 hour per axis			
Shock(non operating)	20G for 11msc half sin wave,3 axis both directions			

Ordering Information:

Part Number	Description	Revision
TLSE-067110-30-10-HA	W-Band Frequency Extender, X6, 67-110GHz, Output Power: -10~+20dBm	Rev.1.0

Components Included:

Part Number	Description	Quantity
TLACTDC-22012	AC-to-DC Power Adapter	1 PCS