Suzhou Talent Microwave,Inc
sales@talentmw.com
www.talentmw.com

Solid State High Power Amplifier Systems

4-8GHz/63dB Gain/63dBm Psat/220V AC

Model: TLPA4G8G-63-62-P-BC

TLPA4G8G-63-62-P-BC is a solid state high power amplifier systems provides high output power and high gain across the 4 to 8 GHz frequency range. The amplifier features a built-in 220V power supply, making it easy to use in most lab environments. This model features thermal self protection, preventing damage to the amplifier and providing added reliability.

Features:

- Frequency range: 4-8GHz
- Gain: 63dB Min
- Psat Output Power: 62dBm Min
- Protection:Over TEM,over voltage, over current ,over VSWR protection
- 50 Ohm Matched Input / Output

电气特性 Electrical Characteristics:

参数 Parameter	代码 Symbol	Min	Typ	Max	单位 Units
频率范围 Frequency range	BW		4-8		GHz
功率增益 Power Gain	GP	63			dB
输出功率调节范围 Output Power adjust Range	ΔPR		30		dB
输出功率调节步进 Output Power adjust Step	ΔPS		0.5		dB
饱和输出功率 Output Psat	Psat	62			dBm
峰值输出功率 Peak Output Power	P.P	62	63		dBm
峰值功率平坦度 Peak Power flatness	ΔP.PL		±0.5		dB
杂散 Spurious	Spur			-60	dBc
谐波 Harmonics	HAM			-12	dBc
调制频率 Modulation Frequency	MF	0.2		100	KHz
脉冲宽度 Pulse Width	T	0.2		300	us
占空比 Duty Cycle	τ			10	%
上升/下降沿 Rise/Fall Time	Tr		50	100	ns
输入驻波 Input VSWR	VSWR			2	:1
交流电压 AC Voltage	Vac		220		V AC
10%占空比功耗 Power consumption@10% duty cycle	Pdiss			1000	W
阻抗 Impedance	I/O-IMP		50		Ohms

Suzhou Talent Microwave,Inc
sales@talentmw.com
www.talentmw.com

机械特性 Mechanical Specifications:

参数 Parameter	指标 Value	单位 Units
输入/输出接口 Input/Output Connector	TNC Female/WRD350	
供电启动按键 AC power Soft-Start	Push-button	
正向/反向耦合 Forward/Reverse Coupling Connector	SMA Female/SMA Female	
液晶显示屏 Front Panel LCD Screen Display	7 inch touch screen	
通信接口Communication Interfaces	RJ45/DB9	
脉冲输入接口 Pulse Input Connector	TNC Female	
尺寸 Size	12U	
重量 Weight	≤150	Kg

绝对最大值 Absolute Maximum Ratings:

参数 Parameter	指标 Value
输入功率 RF Input Power	+5 dBm
ESD灵敏度 ESD sensitivity (HBm)	Class 0, passed 150V

外形图 Outline Drawing:

Unit:mm

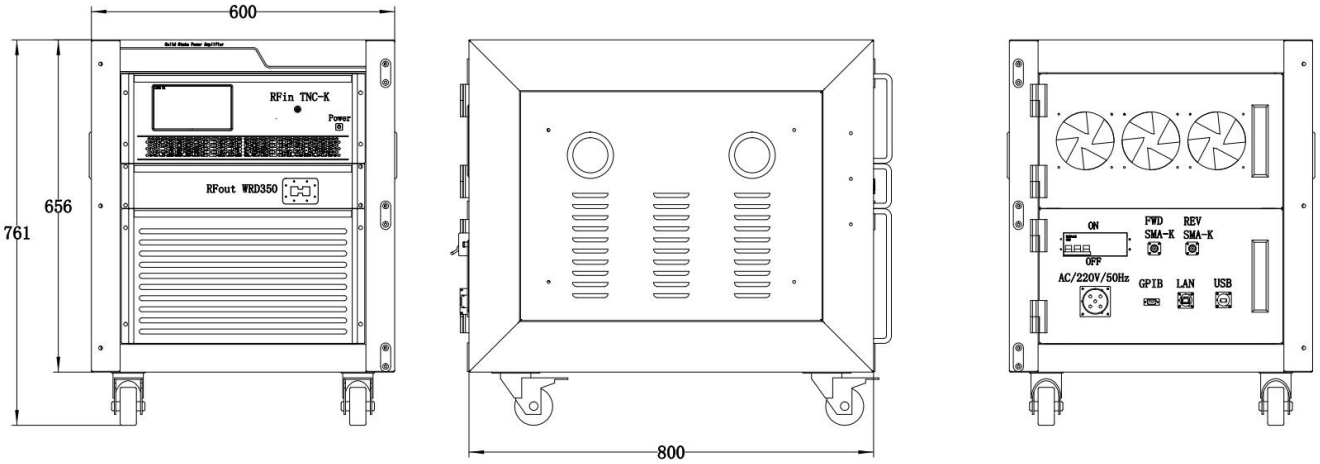

Suzhou Talent Microwave,Inc
sales@talentmw.com
www.talentmw.com

主要功能 Key Features:

参数 Parameter	特点 Advantages
控制功能 Control functions	1, Power setting on/off 2,ALC automatic level control 3,RF setting on/off 4,Gain adjustment 5,Real time status query
内置保护功能 Protection functions	1,Over TEM 2,Over voltage 3,Over current 4,Over VSWR
监控和控制 Remote control	RS422/Ethernet
冷却系统 Cooling system	Built in Cooling system,forced air cooling

温度环境 Environmental Conditions:

参数 Parameter	Min	Typ	Max	单位 Units
操作温度 Operating Temperature*	-20		+40	℃
存储温度 Non-operating Temperature*	-30		+50	℃
相对湿度 Relative humidity		95		%
海拔 Altitude	10,000			feet
震动 Shock / Vibration(MIL-STD-810F)	25g rms (15 degree 2KHz) endurance, 1 hour per axis			
冲击 Shock(non operating)	20G for 11msc half sin wave,3 axis both directions			

*Note: For a wider temperature range, please consult the manufacturer.

订货信息 Ordering Information:

标准型号 Base Number	描述 Description	版本号 Revision
TLPA4G8G-63-62-P-BC	Solid State High Power Amplifier Systems 4-8GHz,Gain:63dB,Psat:62dBm,220V AC,Built in Fan Cooling	Rev.1.1